Bosston
A QUALITY PRODUCT

PKS Key Selector Switches

EXPLOSIONPROOF

For UL.60079-1 Standard Class I, II Div. 2 Groups C,D,E,F and G

For IEC.60079-0/1 Standard Zone 2

ISO9001:2008

Technical data

Type of Protection: Ex d IIA T6

Conforming to : Standards IEC 60079-1 or UL 60079-0/1

Marking for test : Ex II2G

Degree of Protection : IP66 acc.To IEC 60529

Ambient Temp. (Ta) : -20°C to+ 55 °C Temp.class T6

Type :SSL

Protection class for UL. : Class I, Division 1, 2 Group.C,D
Class II, Division 1 or 2 Groups.E,F,G
Class III

Protection class for IEC : Zone 1 , 2

Conduit hub : 3/4" NPT.

Features:

- Compact rectanular shape enclosure.
- Two mounting lugs.
- Two or three positions in switching.
- Contact rating 3A. 220V.AC. (10A.Rated thermal current).
- Key operated for special purpose control (2keys supp;ied).
- 3/4 inch NPT, dead-end or through-feed conduit hub
- Smooth and well-rounded conduit stop in each hub tc protect conductor insulation.

Applications:

The SSL key selector switches are suitable for

- use in hazardous areas due to the presence of flammable gases or vapors, combustible dusts or ignitible fibers.
- use in conjunction with magnetic starters or contactors to remote control of motors.
- circuit control selection by key operator.
- indoor and corrosive locations.

Standard Materials:

- Body and cover
- Copper-free aluminium
- Bolts and operating shaft
- Stainless steel

Standard Finishes:

- Copper-free aluminium
- Epoxy-polyester powder coated.
- Stainless steel
- Natural

Catalogue Nubmer:

PKS210S

Number of contact	Symbol Left	Symbol Center	Symbol Right	Nameplate Marking	Cat.,No. Dead-end (1 hub)	Cat.,No. Through-feed (2 hub)
2 - Positions						
1NO		-		OFF - ON	PKS210□	PKS210H□
2 NO		-		OFF - ON	PKS220□	PKS220H□
1NO-1NC		-		MAN. - AUTO	PKS211□	PKS211H□
3 - Positions						
2NO				MAN. - OFF - AUTO.	PKS320✧	PKS320H✧
2NC				Specify	PKS302✧	PKS302H✧

Options:

□ For 2 - positions with spring return, add suffix - *S* to Cat.,No.

✧ For 3 - positions with spring return to center
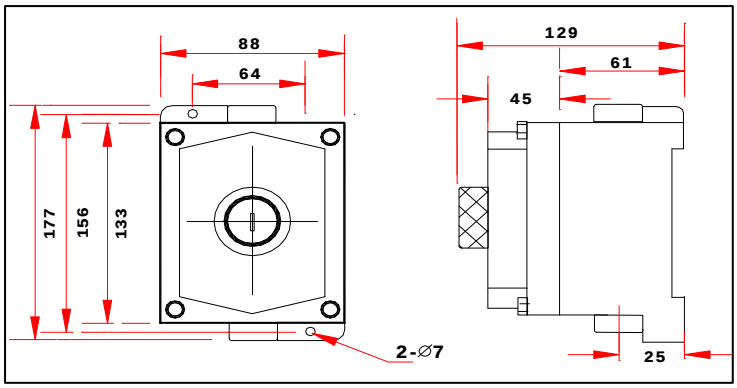
- Spring return from right, add suffix - *R*
- Spring return from left, add suffix - *L*